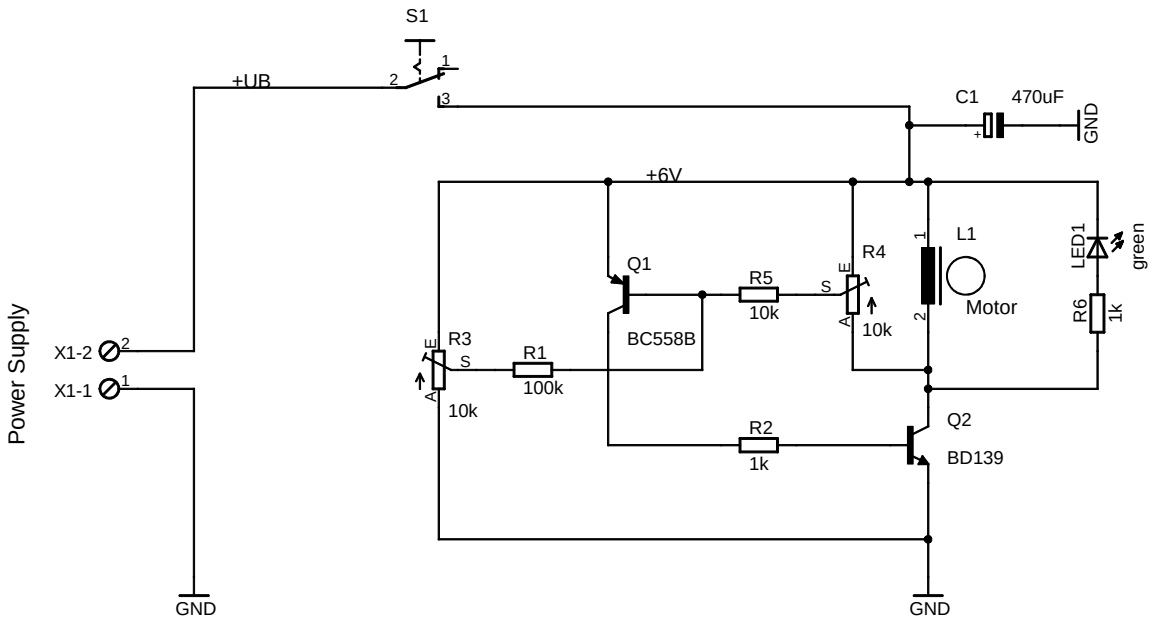

L1: 335 n, 0,25 mm, R = 8,2 Ohm, Di = 18,0, Do = 25,6, L = 7,3mm

1-Phase Bedini Motor	R. Merz
	1-Ph_Bedini_V10
Magnetron Labs Merz	09.04.2016 16:03:43
	Sheet: 1/1

09.04.2016 16:03:51 f=0.98 C:\TMP\1-Ph_Bedini_V10.sch (Sheet: 1/1)