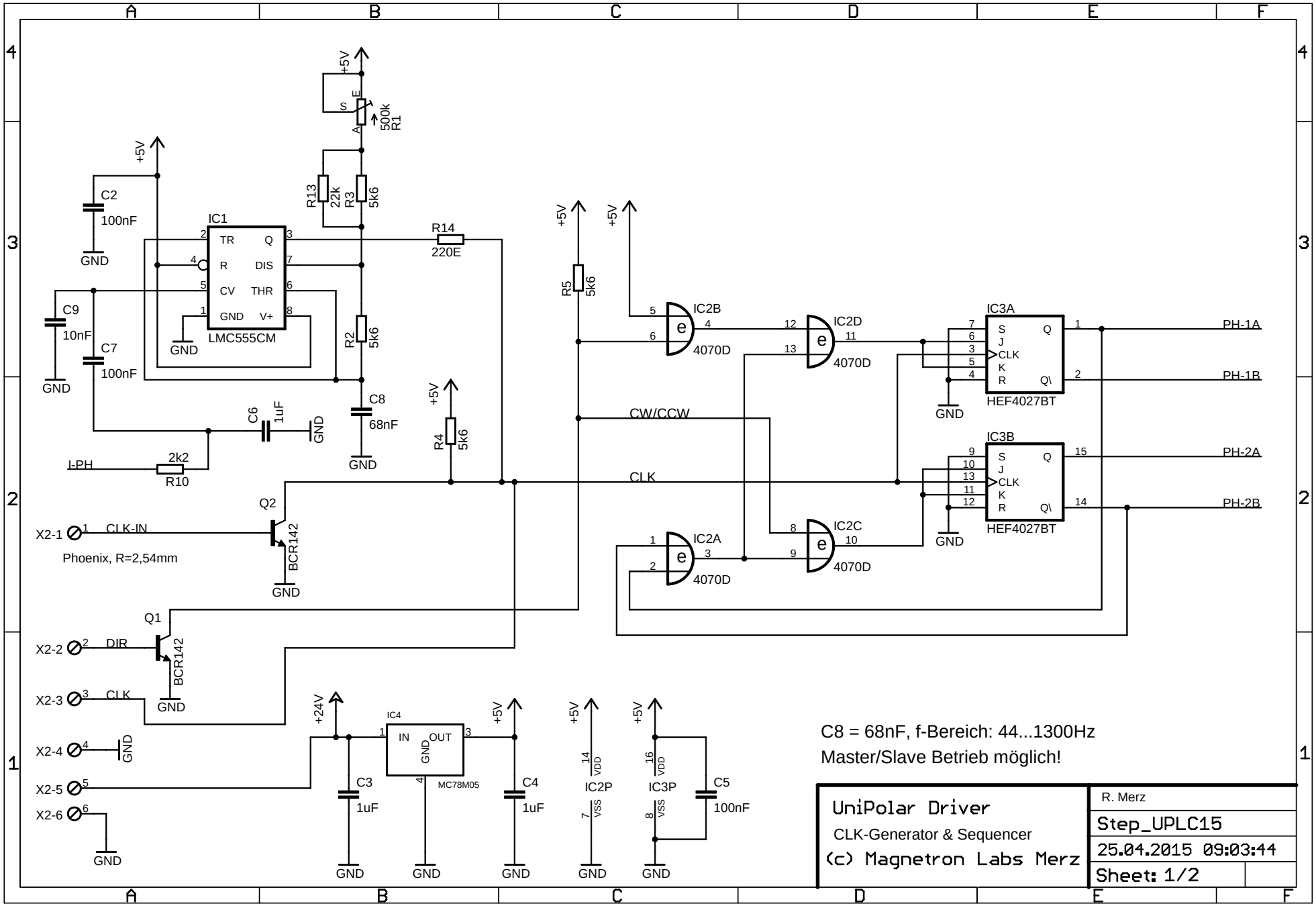

30.08.2015 14:48:27 f=0.99 C:\Program Files\EAGLE-4.16\projects\Mag\Step_UPLC10\Step_UPLC15.sch (Sheet: 1/2)