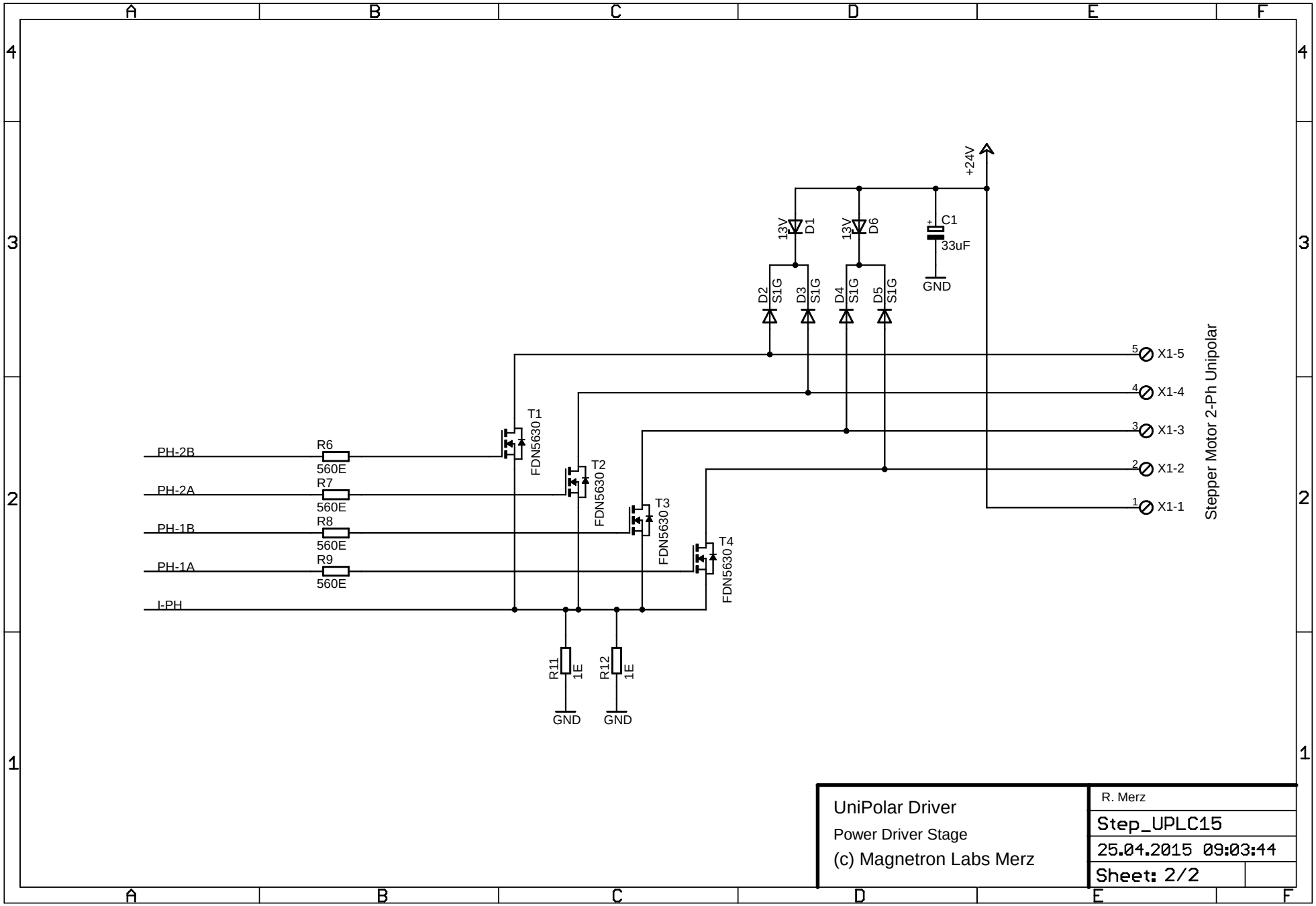
+24V
13V
D1
13V
D6
C1
33uF
GND
D2
S1G
D3
S1G
D4
S1G
D5
S1G
X1-5
X1-4
X1-3
X1-2
X1-1
Stepper Motor 2-Ph Unipolar
T1
FDN5630
T2
FDN5630
T3
FDN5630
T4
FDN5630
PH-2B
PH-2A
PH-1B
PH-1A
I-PH
R6
560E
R7
560E
R8
560E
R9
560E
R11
1E
R12
1E
GND
GND
UniPolar Driver
Power Driver Stage
(c) Magnetron Labs Merz
R. Merz
Step_UPLC15
25.04.2015 09:03:44
Sheet: 2/2